Journal of Medical Microbiology (2006), **55**, 1125–1134 **DOI** 10.1099/jmm.0.46598-0

Emergence and spread of two distinct clonal groups of multidrug-resistant *Escherichia coli* in a veterinary teaching hospital in Australia

Hanna E. Sidjabat,[1,2] Kirsty M. Townsend,[1] Michael Lorentzen,[1] Kari S. Gobius,[3] Narelle Fegan,[3] James J.-C. Chin,[4] Karl A. Bettelheim,[5] Nancy D. Hanson,[6] John C. Bensink[1] and Darren J. Trott[1]

Correspondence
Darren J. Trott
d.trott@uq.edu.au

[1]School of Veterinary Science, University of Queensland, Brisbane, QLD 4072, Australia

[2]Medical Faculty of the Christian University of Indonesia (FK-UKI), Cawang Atas, Jakarta, Indonesia

[3]Food Science Australia, Tingalpa DC, QLD 4173, Australia

[4]Immunology and Microbiology, Elizabeth Macarthur Agricultural Institute, PMB 8, Camden, NSW 2570, Australia

[5]Microbiology Diagnostic Unit, Public Health Laboratory, Department of Microbiology and Immunology, University of Melbourne, Royal Parade, Parkville, VIC 3052, Australia

[6]Center for Research in Anti-Infectives and Biotechnology, Department of Medical Microbiology and Immunology, School of Medicine, Creighton University, 2500 California Plaza, Omaha, NE 68178, USA

Received 28 February 2006
Accepted 11 May 2006

Multidrug-resistant *Escherichia coli* (MDREC) expressing AmpC β-lactamases have emerged as a cause of opportunistic infections in dogs. Following a cluster of extraintestinal infections caused by two distinct clonal groups (CGs) of bla_{CMY}-producing MDREC, a 12-month infection control study was undertaken at a veterinary teaching hospital in Brisbane, Australia. Swabs from the rectum of hospitalized dogs ($n = 780$), hospital staff ($n = 16$) and the hospital environment ($n = 220$) were plated onto selective agar to obtain multidrug-resistant (MDR) coliforms. These were then tested by multiplex PCR for *E. coli uspA*, bla_{CMY} and the class 1 integron-associated *dfrA17-aadA5* gene cassette for rapid identification of MDREC CG 1 (positive for all three genes) and CG 2 (positive for *uspA* and bla_{CMY} only). A total of 16·5 % of the dog rectal swabs and 4·1 % of the hospital environmental swabs yielded MDREC, and on the basis of multiplex PCR, PFGE and plasmid profiling, these were confirmed to belong to either CG 1 or CG 2. Both CG 1 and CG 2 isolates were obtained from clinical cases of extraintestinal infection and rectal swabs from hospitalized dogs over the same period of time, whereas only CG 1 isolates were obtained from the hospital environment. Both CGs were prevalent during the first 6 months, but only CG 2 was isolated during the second 6 months of the study. Two isolates obtained from rectal swabs of staff working in the hospital belonged to CG 2, with one of the isolates possessing the same REDP as nine isolates from dogs, including six isolates associated with cases of extraintestinal infection. CG 1 isolates belonged to *E. coli* serotypes O162 : H−, OR : H− or Ont : H−, whereas CG 2 isolates belonged to O153 : HR, OR : HR or OR : H34. These results confirm that in this particular outbreak, canine MDREC were highly clonal and CG 2 MDREC may colonize both humans and dogs.

INTRODUCTION

Antimicrobial resistance is a complex problem involving various bacterial species, resistance mechanisms, transfer mechanisms and reservoirs. The horizontal transfer of antimicrobial resistance genes through plasmids, integrons and transposons has been found to play an important role in the dissemination of antimicrobial resistance genes (Winokur

Abbreviations: CG, clonal group; ESBL, extended-spectrum β-lactamase; ExPEC, extraintestinal pathogenic *E. coli*; ICU, intensive care unit; MDR, multidrug resistant; MDREC, multidrug-resistant *E. coli*; REDP, restriction endonuclease digestion profile; UQVDL, University of Queensland Veterinary Diagnostic Laboratory; UQVTH, University of Queensland Veterinary Teaching Hospital.

Downloaded from www.sgmjournals.org by
IP: 93.91.26.109
On: Sat, 05 Sep 2015 05:39:27

et al., 2001; Yan *et al.*, 2004). Dog faeces have been proposed as a possible reservoir of *Escherichia coli* strains that cause extraintestinal infection in humans, since there is clonal commonality between canine faecal *E. coli* and human clinical *E. coli* isolates (Johnson *et al.*, 2001, 2003). In addition, the close physical contact at high frequency between dogs and humans increases the potential for transmission of resistant bacteria between companion animals and humans, as well as the exchange or transfer of antimicrobial resistance genes to human pathogens (Guardabassi *et al.*, 2004).

In the late 1980s, plasmids encoding non-inducible AmpC β-lactamases, which confer resistance to almost all β-lactam antibiotics with the exception of cefepime, cefpirome and the carbapenems, in particular $bla_{\text{CMY-2}}$, were first identified in *E. coli* and *Klebsiella pneumoniae* isolates from cases of nosocomial infection in humans (Bauernfeind *et al.*, 1989). bla_{CMY} genes have been detected in *E. coli* isolated from companion animals which were associated with nosocomial infections in veterinary hospitals (Carattoli *et al.*, 2005; Sanchez *et al.*, 2002). Whilst still comparatively rare compared to extended-spectrum β-lactamases (ESBLs), plasmid-mediated AmpCs are increasingly being identified in isolates causing human and animal urinary tract disease and other opportunistic infections worldwide (Carattoli *et al.*, 2005; Navarro *et al.*, 2001; Yan *et al.*, 2004). Of major concern is the fact that bla_{CMY} genes are usually encoded on large multidrug-resistant (MDR) plasmids that can be readily transferred between *Salmonella* and *E. coli* (Hossain *et al.*, 2004; Winokur *et al.*, 2001).

We previously identified plasmid-mediated resistance genes in a collection of 11 multidrug-resistant *E. coli* (MDREC) isolates originating from clinical cases of opportunistic extraintestinal infection in a veterinary teaching hospital in Australia (Sidjabat *et al.*, 2006). The MDREC isolates were found to belong to two distinct clonal groups (CGs) and possessed $bla_{\text{CMY-7}}$, a β-lactamase gene on a $\sim$93 kb plasmid that was common to all isolates. In the current paper, we describe a 12-month infection control study that was conducted to limit the further occurrence of extra-intestinal infections and to determine the epidemiological cycle of MDREC infection within the hospital. Selective media were used to obtain MDR coliforms from the hospital environment and from rectal swabs of hospitalized dogs and of hospital employees, and a multiplex PCR was designed to identify the MDR isolates as *E. coli* and screen them for $bla_{\text{CMY-7}}$ and *dfrA17-aadA5*. A subset of representative isolates was characterized using PFGE, plasmid analysis and serotyping, and compared to the 11 previously characterized MDREC strains to determine clonal relationships.

METHODS

Infection control study procedures, swab specimen origin and isolation of MDR coliforms. Over a 1-year period (August 2000 to July 2001), a total of 780 rectal swabs were obtained from 409 hospitalized dogs at the University of Queensland Veterinary Teaching Hospital (UQVTH). Where possible, dogs were screened at the commencement, every second day during and at the conclusion of their hospitalization period, and as such, multiple swabs were obtained from some dogs. Various sites within the hospital environment, especially areas that were suspected to be contaminated with MDREC, were swabbed ($n=220$) periodically during the same time period. Rectal swabs were also obtained from 16 anonymous veterinary hospital employees who voluntarily provided the swabs as part of the infection control study. For selection of MDR coliforms, swabs were cultured on MacConkey agar containing 5 μg enoxacin ml^{-1} (Sigma) and 5 μg gentamicin ml^{-1} (Sigma) (MCAEG). Isolates were stored in Luria–Bertani broth with 15 % (v/v) glycerol at −20 °C. A flow chart of the infection control study is presented in Fig. 1.

Multiplex PCR assay for rapid identification of MDREC carrying bla_{CMY} and the *dfrA17-aadA5* gene cassette array. The multiplex PCR was optimized on representative clinical MDREC isolates as described in a previous study (Sidjabat *et al.*, 2006) (Fig. 2). *E. coli* strains belonging to CG 1 were positive for all three genes (*uspA*, *dfrA17-aadA5* and bla_{CMY}), whereas those belonging to CG 2 were positive for *uspA* and bla_{CMY} only (Fig. 2). Oligonucleotide primers designed to amplify the *dfrA17-aadA5* gene cassette array were combined in a multiplex with primer pairs for the *Citrobacter*-based plasmid-mediated bla_{CMY} (Pérez-Pérez & Hanson, 2002) and *E. coli uspA* (Chen & Griffiths, 1998). Each reaction (25 μl total volume) contained 3·2 pmol each primer, 200 μM each dNTP, 1 × PCR buffer, 2 mM $MgCl_2$ and 0·5 U Red Hot DNA Polymerase (ABgene); an initial denaturation for 5 min at 95 °C was employed, then 30 cycles of denaturation for 30 s at 94 °C, annealing for 30 s at 60 °C and extension for 45 s at 72 °C, followed by a final extension for 5 min at 72 °C. MDR coliforms that were negative for *E. coli uspA* by PCR were then further identified using the Microbact 24E system (Medvet Diagnostic).

PFGE, plasmid analysis, resistance gene identification, antimicrobial susceptibility testing and serotyping. Following identification by multiplex PCR, 62 MDREC isolates were selected for PFGE (Bohm & Karch, 1992) and plasmid analysis (Kado & Liu, 1981) and their profiles were compared with 11 previously analysed extraintestinal clinical isolates as described by Sidjabat *et al.* (2006). The 62 additional isolates (14 isolates associated with the clinical cases, 37 representative isolates from rectal swabs of hospitalized dogs, two human rectal isolates and nine environmental isolates) are described in Table 1 and Fig. 1. The relatedness of restriction endonuclease digestion profiles (REDPs) was determined by pairwise comparison. Isolates were considered to belong to the same REDP if their patterns were indistinguishable; and closely related if their patterns differed by changes consistent with a single genetic event (Tenover *et al.*, 1995). The Dice coefficient was used to assess similarities between the REDP of pairs of isolates. Based on this information, matrices of similarity coefficients between all isolates were clustered by the unweighted pair group method with arithmetic means (UPGMA). A dendrogram was constructed to reflect the similarities between strains on the basis of a 2 % band position tolerance and a 2 % small global shift in pattern setting. The size of the plasmids was estimated as described previously (Sidjabat *et al.*, 2006).

Resistance to chloramphenicol and spectinomycin was determined according to the Clinical Laboratory Standards Institute (CLSI) standard methodology for disk diffusion susceptibility (National Committee for Clinical Laboratory Standards, 2003). β-Lactamases (bla_{TEM} and bla_{CMY}), *catA1* and class 1 integron-associated resistance genes were identified by PCR using boiled cell lysates as described previously (Sidjabat *et al.*, 2006). A subset of 33 isolates (all 25 clinically related strains, two human rectal and six randomly selected

Downloaded from www.sgmjournals.org by
IP: 93.91.26.109
On: Sat, 05 Sep 2015 05:39:27

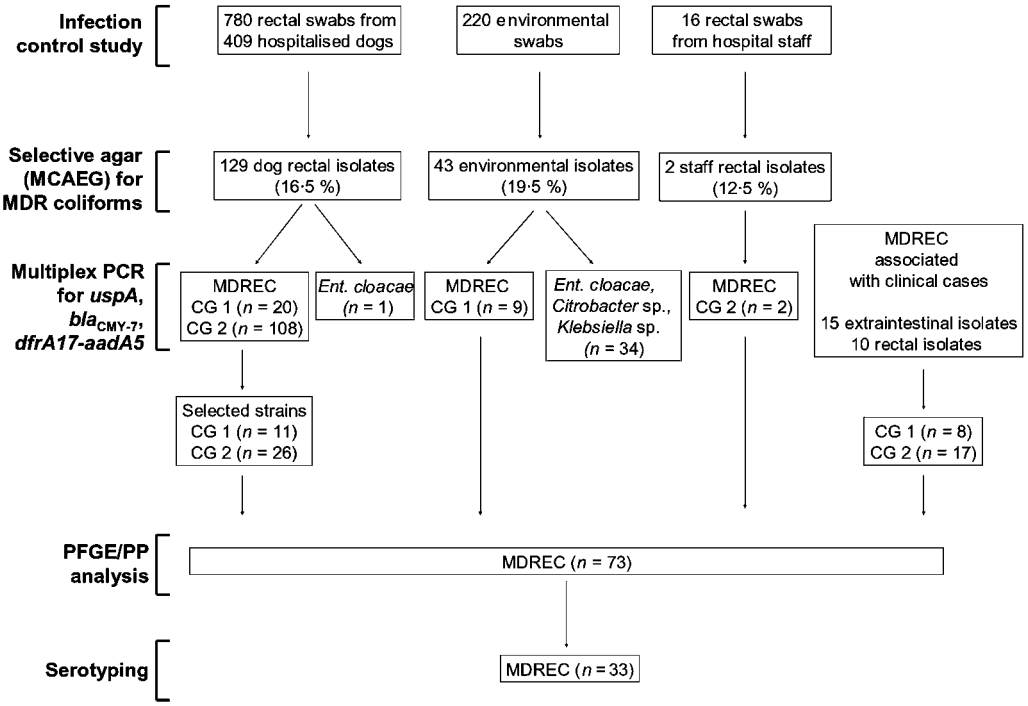

Fig. 1. Flow chart of the MDREC infection control study conducted at UQVTH. PP, plasmid profile.

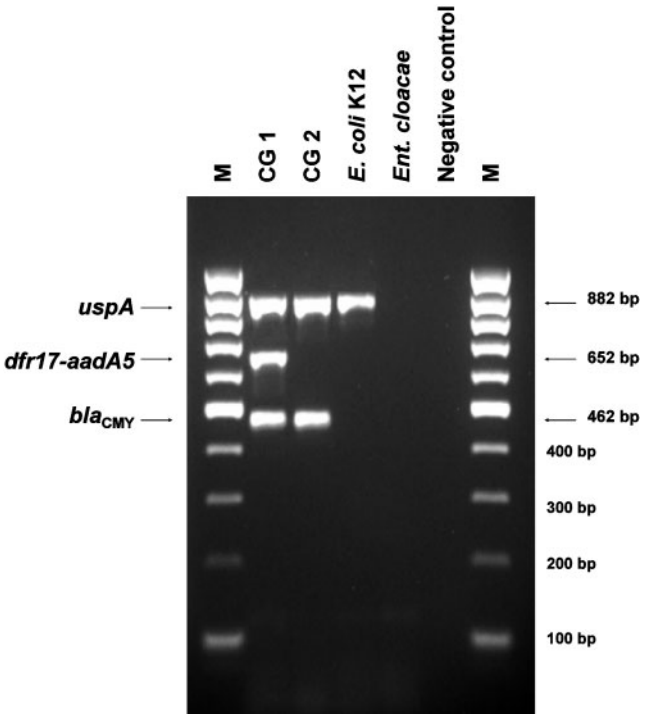

Fig. 2. Multiplex PCR for rapid identification of MDR coliforms as *E. coli* containing CG 1 (*dfrA17-aadA5* and bla_{CMY}) or CG 2 (bla_{CMY} only) antimicrobial resistance genes. M, molecular mass marker.

environmental isolates) was subjected to somatic (O) and flagellar (H) antigen serotyping as described previously (Bettelheim & Thompson, 1987) (Table 1).

RESULTS

Isolation of MDR coliforms obtained during the infection control study

A total of 129 (16·5 %) of the 780 rectal swabs obtained from hospitalized dogs over a 1-year period gave a positive coliform culture when plated on MCAEG. Of the 409 dogs that were screened, a total of 65 (15·9 %) were shown to be rectal carriers of MDR coliforms on at least one occasion (data not shown). The canine rectal isolates were all obtained from individual animals, except for R3, R5–R7 and R9, which yielded both rough and smooth colony variants (designated a and b) from single swab specimens (Table 1). A total of 43 (19·5 %) of 220 environmental swabs were positive for MDR coliform isolates. Areas that yielded a positive result included the intensive care unit (ICU) (respirator, cages, drain, air vents and bedding), small and large dog wards (air vents, cages, drains and bedding including clean blankets) and the food preparation area. None of the swabs obtained from the surgical suite, treatment and examination rooms, or the cancer chemotherapy ward yielded a positive culture. Two of the 16 rectal swabs obtained from anonymous hospital employees contained MDR coliforms.

Downloaded from www.sgmjournals.org by
IP: 93.91.26.109
On: Sat, 05 Sep 2015 05:39:27

Table 1. Characteristics of 73 MDREC isolated at UQVTH from 1999 to 2001

Abbreviations: ND, not determined; NT, not tested; SDW, small dog ward (surgery).

Sample type	Source of samples	Isolate no.	Date of isolation	REDPs	Plasmid profiles	Antimicrobial resistance gene†					Serotype
						β-Lactamase		*catA1*	Class 1 integron		
						bla_{TEM}	bla_{CMY-7}		*int*I	Identified gene cassettes	
Clinical cases*											
Case 1	Urine	C1‡	28 October 1999	1a	I	+	+	+	+	*dfrA17-aadA5*	OR : H−
Case 2	Orthopaedic screw	C2a‡	17 April 2000	1b	I	+	+	+	+	*dfrA17-aadA5*	Ont : H−
		C2b‡	8 May 2000	2a	IIa	+	+	−	+	ND	O153 : HR
Case 3	Orthopaedic screw	C3‡	2 May 2000	2a	IIb	+	+	−	+	ND	O153 : HR
Case 4	Abscess	C4‡	12 May 2000	2a	IIa	+	+	−	+	ND	O153 : HR
Case 5	Epididymis	C5a‡	6 July 2000	2a	IIa	+	+	−	+	*dfrA5*	O153 : HR
		C5b	6 July 2000	2a	IIa	+	+	−	+	*dfrA5*	OR : HR
	Rectal swabs	CR11a	10 August 2000	1d	I	+	+	+	+	*dfrA17-aadA5*	OR : H−
		CR11b	10 August 2000	1d	I	+	+	+	+	*dfrA17-aadA5*	Ont : H−
		CR131	7 August 2001	2b	IId	+	+	−	+	ND	OR : HR
		CR132	10 August 2001	2b	IId	+	+	−	+	ND	OR : HR
Case 6	Urine	C6a‡	27 July 2000	1b	I	+	+	+	+	*dfrA17-aadA5*	O162 : H−
		C6b	27 July 2000	1b	I	+	+	+	+	*dfrA17-aadA5*	Ont : H−
	Rectal swab	CR13	29 August 2000	1d	I	+	+	+	+	*dfrA17-aadA5*	O162 : H−
Case 7	Urine	C7a	14 September 2000	2a	IId	+	+	−	+	ND	OR : HR
		C7b‡	22 September 2000	2b	IIa	+	+	−	+	ND	OR : HR
Case 9	Ear swab	C9‡	8 December 2000	1b	I	+	+	+	+	*dfrA17-aadA5*	Ont : H−
Case 11	Surgical swab	C11‡	4 April 2001	2c	IIc	+	+	−	+	ND	OR : HR
	Rectal swab	CR31	30 March 2001	2c	IIc	+	+	−	+	ND	OR : HR
Case 12	Urine	C12a‡	22 August 2001	2d	IIa	+	+	−	+	ND	OR : HR
		C12b	12 September 2001	2d	IIa	+	+	−	+	ND	OR : HR
	Rectal swabs	CR137	21 August 2001	2d	IIa	+	+	−	+	ND	OR : HR
		CR142	29 August 2001	2d	IIa	+	+	−	+	ND	OR : HR
		CR154	25 September 2001	2b	IIa	+	+	−	+	ND	OR : H34
		CR176	9 October 2001	2d	IIa	+	+	−	+	ND	OR : H34
Rectal isolates from hospitalized dogs											
		R1	7 August 2000	1b	I	+	+	+	+	*dfrA17-aadA5*	NT
		R2	7 August 2000	1c	I	+	+	+	+	*dfrA17-aadA5*	NT
		R3a	7 August 2000	1b	I	+	+	+	+	*dfrA17-aadA5*	NT
		R3b	7 August 2000	1b	I	+	+	+	+	*dfrA17-aadA5*	NT
		R4	7 August 2000	1d	I	+	+	+	+	*dfrA17-aadA5*	NT
		R5a	7 August 2000	2g	IIa	+	+	−	+	ND	NT
		R5b	7 August 2000	1b	I	+	+	+	+	*dfrA17-aadA5*	NT

Downloaded from www.sgmjournals.org by
IP: 93.91.26.109
On: Sat, 05 Sep 2015 05:39:27

Table 1. cont.

Sample type	Source of samples	Isolate no.	Date of isolation	REDPs	Plasmid profiles	Antimicrobial resistance gene†					Serotype
						β-Lactamase		*catA1*	Class 1 integron		
						bla_{TEM}	bla_{CMY-7}		*int*I	Identified gene cassettes	
		R6a	7 August 2000	2a	IIa	+	+	−	+	ND	NT
		R6b	7 August 2000	1b	I	+	+	+	+	*dfrA17-aadA5*	NT
		R7a	7 August 2000	1b	I	+	+	+	+	*dfrA17-aadA5*	NT
		R7b	7 August 2000	2g	IIa	+	+	−	+	ND	NT
		R8	7 August 2000	1b	I	+	+	+	+	*dfrA17-aadA5*	NT
		R9a	7 August 2000	2b	IId	+	+	−	+	ND	NT
		R9b	7 August 2000	2b	IId	+	+	−	+	ND	NT
		R14	1 September 2000	1b	I	+	+	+	+	*dfrA17-aadA5*	NT
		R15	13 December 2000	1c	I	+	+	+	+	*dfrA17-aadA5*	NT
		R16	13 December 2000	2b	IIa	+	+	−	+	ND	NT
		R17	13 December 2000	2b	IIa	+	+	−	+	ND	NT
		R18	30 January 2001	2b	IIa	+	+	−	+	ND	NT
		R20	14 February 2001	2a	IIa	+	+	−	+	ND	NT
		R21	6 March 2001	2b	IId	+	+	−	+	ND	NT
		R22	6 March 2001	2a	IIa	+	+	−	+	ND	NT
		R25	16 March 2001	2e	IIa	+	+	−	+	ND	NT
		R26	21 March 2001	2b	IIe	+	+	−	+	ND	NT
		R27	21 March 2001	2a	IIc	+	+	−	+	ND	NT
		R28	21 March 2001	2c	IIc	+	+	−	+	ND	NT
		R29	23 March 2001	2c	IIc	+	+	−	+	ND	NT
		R30	29 March 2001	2b	IIc	+	+	−	+	ND	NT
		R32	30 March 2001	2c	IIc	+	+	−	+	ND	NT
		R33	3 April 2001	2c	IIc	+	+	−	+	ND	NT
		R36	15 May 2001	2b	IIc	+	+	−	+	ND	NT
		R37	15 May 2001	2b	IIa	+	+	−	+	ND	NT
		R40	15 May 2001	2b	IIa	+	+	−	+	ND	NT
		R43	4 June 2001	2b	IIa	+	+	−	+	ND	NT
		R48	16 June 2001	2b	IIa	+	+	−	+	ND	NT
		R61	20 June 2001	2b	IIa	+	+	−	+	ND	NT
		R128	30 July 2001	2b	IIa	+	+	−	+	ND	NT
Human (hospital staff) rectal isolates											
		Sr7	27 February 2001	2e	IIa	+	+	−	+	ND	*E. coli* O153 : HR
		Sr8	1 March 2001	2a	IIe	+	+	−	+	ND	*E. coli* O153 : HR
Environmental isolates											
ICU	Corner dust	E1b	1 August 2000	1b	I	+	+	+	+	*dfrA17-aadA5*	*E. coli* Ont : H−
SDW	Air vent	E5a	4 August 2000	1b	I	+	+	+	+	*dfrA17-aadA5*	*E. coli* Ont : H−

Downloaded from www.sgmjournals.org by
IP: 93.91.26.109
On: Sat, 05 Sep 2015 05:39:27

Table 1. cont.

Sample type	Source of samples	Isolate no.	Date of isolation	REDPs	Plasmid profiles	Antimicrobial resistance gene†					Serotype
						β-Lactamase		*catA1*	Class 1 integron		
						bla_{TEM}	bla_{CMY-7}		*intI*	Identified gene cassettes	
	Cage roof	E5e	4 August 2000	1b	I	+	+	+	+	*dfrA17-aadA5*	NT
	Bedding	E7a	7 August 2000	1b	I	+	+	+	+	*dfrA17-aadA5*	*E. coli* O162 : H−
ICU	Respirator	E8	7 August 2000	1b	I	+	+	+	+	*dfrA17-aadA5*	*E. coli* Ont : H−
	Bedding	E11	9 August 2000	1b	I	+	+	+	+	*dfrA17-aadA5*	NT
	Bedding	E12	9 August 2000	1b	I	+	+	+	+	*dfrA17-aadA5*	NT
	Drainage	E18	13 September 2000	1b	I	+	+	+	+	*dfrA17-aadA5*	*E. coli* Ont : H−
SDW	Drainage	E20	13 September 2000	1b	I	+	+	+	+	*dfrA17-aadA5*	*E. coli* Ont : H−

*The isolate from case 8 was lost and isolates from case 10 were identified as *Ent. cloacae*.
†Identified by PCR.
‡Isolate has been described previously (Sidjabat *et al.*, 2006).

Identification of MDR coliforms as *E. coli* and prevalence of bla_{CMY-7} and the *dfrA17-aadA5* gene cassette array

The multiplex PCR was tested on all MDR coliform isolates obtained during the infection control study. All isolates were positive for both bla_{CMY} and *E. coli uspA* (i.e. were identified as MDREC carrying bla_{CMY-7}), except for a single dog rectal isolate and 34 environmental isolates. These were subsequently identified as *Enterobacter cloacae* or other non-*E. coli* species of *Enterobacteriaceae* on the basis of the Microbact 24E test, and were not characterized further in this study. Therefore, only 4·1 % of the hospital environment swabs yielded MDREC. Twenty of the dog rectal isolates (15·5 %) and the remaining nine environmental isolates possessed the *dfrA17-aadA5* gene cassette array that was common to CG 1, in addition to *uspA* and bla_{CMY}. These were all obtained during the first 6 months of the study.

MDREC REDPs, plasmid profiles and serotypes

Restriction endonuclease digestion profiles, plasmid profiles and antibiotic resistance gene identifications for the 62 selected MDREC isolates and the 11 previously characterized strains are presented in Table 1. The 73 MDREC isolates were divided into the same two unrelated CGs (CG 1 and CG 2), as described previously (Sidjabat *et al.*, 2006) (Fig. 3). All CG 1 MDREC isolates were resistant to chloramphenicol, showed reduced sensitivity to spectinomycin, and possessed *catA1* and the *dfrA17-aadA5* class I integron array. In CG 1, REDP 1b was the most prevalent profile (20 isolates) and two additional closely related REDP variants were also identified (1c and 1d). In CG 2, REDP 2b was the most prevalent profile, especially among the rectal isolates, and three new REDPs (2e–2g) were identified, confirming the greater genetic diversity within CG 2.

All CG 1 isolates had the same plasmid profile, characterized by the presence of a large ~170 kb plasmid. CG 2 isolates were divided into five similar plasmid profiles (IIa–IIe) (Table 1). As described previously, a large ~93 kb plasmid was common to both CGs and a second plasmid, slightly larger than the ~93 kb plasmid was only present in CG 2 isolates. There was no difference in the band intensity of these ~93 kb plasmids in CG 2, and the division of the CG 2 plasmid profiles into different types was based on variation of plasmids smaller than 23 kb. Plasmid profile IIe was the only new plasmid profile identified by the inclusion of isolates from the infection control study, and this profile was very closely related to plasmid profile IId (data not shown).

Isolates typed as O162 : H− (three isolates), Ont : H− (nine isolates) or OR : H− (two isolates) belonged to CG 1. Six isolates typed as O153 : HR, 11 isolates as OR : HR, and two isolates as OR : H34 belonged to CG 2. Both isolates obtained from rectal swabs from humans shared the same serotype (O153 : HR).

Downloaded from www.sgmjournals.org by
IP: 93.91.26.109
On: Sat, 05 Sep 2015 05:39:27

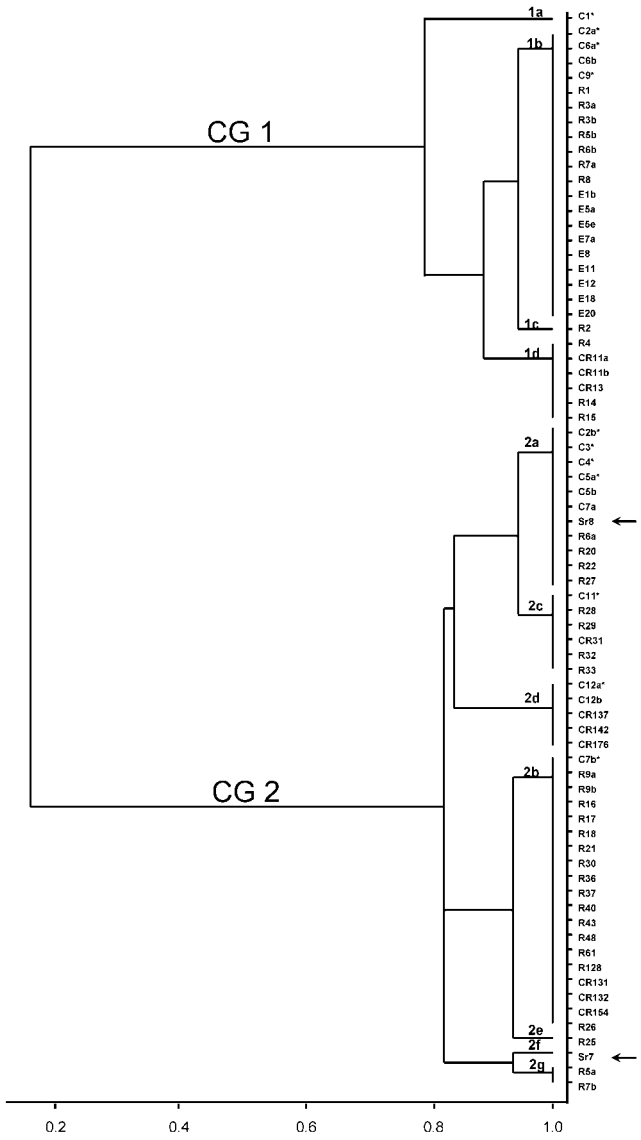

Fig. 3. Dendrogram based on REDP of 73 MDREC isolated during the infection control study at UQVTH divided into two CGs. The stars and arrows indicate the previously described clinical isolates (Table 1) and the two MDREC strains (Sr7 and Sr8) isolated from hospital employees, respectively.

Molecular epidemiology

In CG 1, REDP 1b contained isolates from clinical cases (four isolates), hospitalized dogs (seven isolates), and all the MDREC isolates from the hospital environment (nine isolates) (Fig. 1). The majority of clinical isolates belonged to REDP 2a (six isolates) and the majority of rectal isolates to REDP 2b (17 isolates). None of the environmental isolates belonged to CG 2. However, both MDREC isolates obtained from rectal swabs from humans working in the veterinary hospital were located within this CG. One of the human isolates (Sr8) belonged to REDP 2a together with clinical isolates from cases 2–4, 5 and 7, and several rectal isolates from hospitalized dogs. However, the plasmid profile of isolate Sr8 was slightly different to that obtained for the canine isolates. The REDP of the second human rectal isolate (Sr7) was distinct from that of the other CG 2 strains. However, Sr7 and clinical isolates from cases 2, 4, 7 and 12 had an identical plasmid profile.

In the majority of cases, extraintestinal and rectal isolates obtained from the same clinical case (cases 5, 6, 11 and 12) shared an identical or closely related REDP and plasmid profile. The exception was the the case 5 dog. Extraintestinal isolates obtained from this animal belonged to CG 2, whereas rectal swabs obtained approximately 1 month later yielded a CG 1 strain. However, on a subsequent hospitalization, approximately 1 year later, this animal was confirmed to be a CG 2 carrier.

CG 1 and CG 2 MDREC strains were both demonstrated to be present in the hospital over the same time period (between August and December 2000) and were often isolated on the same day from different dogs. Indeed, during this time period, three of the dogs (R5–R7) were demonstrated to be colonized with both CG 1 and CG 2 strains at the same time. However, the final CG 1 rectal isolate was obtained in December 2000, and, as indicated by multiplex PCR, all the subsequent rectal isolates were shown to belong to CG 2.

DISCUSSION

Several longitudinal studies conducted at veterinary hospitals have indicated that resistance to various antimicrobial agents has emerged among companion animal isolates (Guardabassi *et al.*, 2004). A study of the genetic characterization of AmpC-containing MDREC isolated from dogs in the USA has confirmed that isolates are polyclonal, and this suggests that movement of plasmids between the isolates under antibiotic selection pressure may be epidemiologically important for their persistence within a hospital (Sanchez *et al.*, 2002). In contrast, we identified only two unrelated clonal lineages of MDREC causing opportunistic infections at UQVTH. As well as possessing unrelated REDP patterns, both CGs showed clear differences in plasmid carriage and antimicrobial resistance profiles.

As described previously, the first clinical cases (C1, C2a and C2b) occurred within 6 months of each other (Sidjabat *et al.*, 2006). Then, over a 4-month period, a cluster of five cases of opportunistic infection due to either CG 1 or CG 2 strains occurred, which prompted the infection control study. During a 1-year period, MDREC were detected in rectal swabs of 15·9 % of hospitalized dogs. Both CG 1 and CG 2 strains were isolated during the first 6 months of the study, but CG 2 became predominant during the second half of the study period. The multiplex PCR designed to identify MDR coliform isolates as *E. coli* (*uspA*) carrying bla_{CMY} and *dfrA17-aadA5* was therefore a useful rapid test to distinguish CG 1 and CG 2 MDREC from other MDR coliforms such as *Ent. cloacae*.

Downloaded from www.sgmjournals.org by
IP: 93.91.26.109
On: Sat, 05 Sep 2015 05:39:27

Both O162 : H− and O153 : HR serotypes have been reported to produce Shiga-like toxin (Chart & Perry, 2004; Fernandez-Beros *et al.*, 1988). Strains of serogroup O153 that contain enterotoxigenic *E. coli* virulence genes have also been reported (Fernandez-Beros *et al.*, 1988; Ratnayake *et al.*, 1994), and *E. coli* O153 : H31 was recently found to be one of the predominant MDREC serotypes isolated from elderly people in Israel (Wolk *et al.*, 2004). To the best of our knowledge, this is the first report of the isolation of both these serotypes from dogs.

The high prevalence of rectal carriage and the lack of genetic diversity among the rectal-swab MDREC isolates confirmed that clonal expansion and/or cross-infection with two distinct genetic groups of MDREC was occurring within the hospital, rather than the transfer and spread of a single or multiple MDR plasmid(s) between genetically unrelated isolates. It is possible that the reduced genetic diversity reflected the use of a quinolone/aminoglycoside combination in the selective medium used for the isolation of canine MDREC during the infection control study. It is feasible that a more diverse group of strains carrying the bla_{CMY} plasmid could have been present in the gastrointestinal tract of the hospitalized dogs. However, this is unlikely, as CG 1 and CG 2 MDREC have been the only canine extraintestinal *E. coli* strains identified by the UQVDL during the infection control study period that show resistance to expanded-spectrum cephalosporins (S. M. Moss, unpublished data).

These results suggest that the source of MDREC opportunistic infections in the hospital was likely to be endogenous and that dogs hospitalized for prolonged periods while receiving antimicrobial therapy were at risk of becoming gastrointestinal carriers of MDREC. Transmission of MDREC might have occurred via direct dog-to-dog exposure, exposure to a contaminated environment or iatrogenically. To test this hypothesis, a case-control study to examine risk factors for MDREC rectal carriage in hospitalized dogs is currently being undertaken. Supporting evidence for this hypothesis was demonstrated in a MDREC dog-colonization model, in which, compared to controls, dogs treated orally with a broad-spectrum antimicrobial showed higher MDREC log counts and prolonged shedding following oral administration of MDREC CG 1 strain C1. Without antibiotic selection pressure, this strain was rapidly eliminated from the gastrointestinal tract by the commensal coliforms in dogs not receiving the antimicrobial (Trott *et al.*, 2004).

MDREC was isolated from environmental swabs from the ICU (bedding, drainage, dust and a respirator) and from the small dog ward (air vent, cage, dust and drainage), confirming that MDREC was only isolated from the areas of the hospital where convalescent animals receiving antimicrobial therapy spent most of their time. All of the environmental isolates were obtained during the initial phases of the investigation. As changes to infection control procedures were initiated (regular rectal swabbing of hospitalized dogs, isolation of carrier animals, limited contact between hospitalized dogs during exercise, washing of used bedding in bleach), the prevalence of swabs which were positive for MDREC during regular monthly checks of the hospital environment was reduced to negligible levels. Interestingly, all nine isolates from the hospital environment belonged to CG 1. CG 1 MDREC were widely disseminated, with strains isolated from clean and dirty bedding, air ventilation units and drainage systems in the ICU, and medicine and surgery wards. This may indicate that CG 1 isolates, in contrast to CG 2 isolates, possess certain survival advantages outside the host.

Half of the positive environmental swab specimens and a single hospitalized-dog rectal swab were identified as *Ent. cloacae*. Interestingly, MDR *Ent. cloacae* isolates were isolated from a case of post-operative osteomyelitis (case 10) at UQVTH (Sidjabat *et al.*, 2006). These isolates will be the subject of a separate study, as preliminary characterization suggests that they contain an ESBL (H. E. Sidjabat and others, unpublished results).

Although CG 2 strains were never isolated from the hospital environment, more importantly, they were isolated from two of 16 anonymous UQVTH employees. This evidence suggests that there has been transfer of MDREC between dogs and humans by the faecal–oral route. Several studies have shown the potential for MDR extraintestinal pathogenic *E. coli* (ExPEC) of animal origin to cause infections in humans. It has been found that MDR uropathogenic *E. coli* can be spread to humans through contaminated food products of animal origin (Ramchandani *et al.*, 2005). Johnson and colleagues have shown that canine faecal *E. coli* commonly exhibit virulence traits and phylogenetic characteristics typical of human ExPEC, particularly between canine and human *E. coli* responsible for urinary tract infections (Johnson *et al.*, 2003). Therefore, cats and dogs may represent potential sources of spread of antimicrobial resistance, and the risk may be compounded by the use of antimicrobial agents in these animals and by their close contact with humans (Guardabassi *et al.*, 2004).

Does the emergence of two CGs of MDREC expressing bla_{CMY-7} at UQVTH have any corollaries with the epidemiology of extraintestinal MDREC infections in human hospitals? Apart from the widespread dissemination of CGs such as O15 : K52 : H1 and the phylogenetically related 'clonal group A' (Manges *et al.*, 2001), ExPEC usually show no clonal dissemination either within or between countries (Landgren *et al.*, 2005). The emergence and spread of CTX-M-15-producing MDREC displaying three different antimicrobial resistance profiles was recently documented in a geriatric hospital in France. However, these strains were shown to be clonally related and all belonged to *E. coli* phylotype B2 (Leflon-Guibout *et al.*, 2004). In conclusion, it therefore seems quite unusual that in our infection control study, two distinct CGs of MDREC expressing different plasmid-mediated resistance genes were isolated from various sources within a single hospital over the same period of time, with the only common plasmid-mediated

Downloaded from www.sgmjournals.org by
IP: 93.91.26.109
On: Sat, 05 Sep 2015 05:39:27

mechanism of resistance shared by the isolates being possession of the ~93 kb bla_{CMY-7}-carrying plasmid.

Our study has confirmed that CG 2 MDREC may colonize both humans and dogs. Antimicrobial selection pressure for the maintenance of MDREC harbouring bla_{CMY} in the gastrointestinal tract of dogs did not appear to be directly related to the use of third-generation cephalosporins in the hospital, but may be related to the widespread use of broad-spectrum β-lactam/clavulanic acid combinations and/or fluoroquinolones. Case-control studies will be needed to verify this hypothesis. Whilst the origin of canine MDREC remains equivocal, human-to-dog transmission could be equally as plausible an explanation as dog-to-human transmission. Johnson *et al.* (2003) concluded that ExPEC strains that possess multiple antimicrobial resistance genes often show a concomitant decrease in the number of extra-intestinal virulence genes that they possess. Studies are currently under way to determine if CG 1 and CG 2 MDREC strains possess ExPEC virulence genes and belong to typical ExPEC phylogenetic groups. In addition, it would be interesting to determine the prevalence of plasmid-mediated bla_{CMY-7} in ExPEC isolated from humans in Australia and South-East Asia.

ACKNOWLEDGEMENTS

This study was supported by grants from the Australian Companion Animal Health Foundation, the New South Wales Canine and Veterinary Foundation and the University of Queensland. The authors gratefully acknowledge Ms Susan M. Moss (UQVDL) for technical assistance in bacterial identification and Ms Mary T. Downs for organizing sample collections. H. E. S. was a recipient of an AusAID postgraduate student scholarship.

REFERENCES

Bauernfeind, A., Chong, Y. & Schweighart, S. (1989). Extended broad spectrum β-lactamase in *Klebsiella pneumoniae* including resistance to cephamycins. *Infection* **17**, 316–321.

Bettelheim, K. A. & Thompson, C. J. (1987). New method of serotyping *Escherichia coli*: implementation and verification. *J Clin Microbiol* **25**, 781–786.

Bohm, H. & Karch, H. (1992). DNA fingerprinting of *Escherichia coli* O157 : H7 strains by pulsed-field gel electrophoresis. *J Clin Microbiol* **30**, 2169–2172.

Carattoli, A., Lovari, S., Franco, A., Cordaro, G., Di Matteo, P. & Battisti, A. (2005). Extended-spectrum β-lactamases in *Escherichia coli* isolated from dogs and cats in Rome, Italy, from 2001 to 2003. *Antimicrob Agents Chemother* **49**, 833–835.

Chart, H. & Perry, N. T. (2004). The serological response to Verocytotoxigenic *Escherichia coli* in patients with haemolytic uraemic syndrome. *Lett Appl Microbiol* **38**, 351–354.

Chen, J. & Griffiths, M. W. (1998). PCR differentiation of *Escherichia coli* from other Gram-negative bacteria using primers derived from the nucleotide sequences flanking the gene encoding the universal stress protein. *Lett Appl Microbiol* **27**, 369–371.

Fernandez-Beros, M. E., Kissel, V., Aguero, M. E., Figueroa, G., D'Ottone, K., Prado, V. & Cabello, F. (1988). Further characterization of *Escherichia coli* O153 : H45, an ETEC serotype disseminated in Chile. *Can J Microbiol* **34**, 85–88.

Guardabassi, L., Schwarz, S. & Lloyd, D. H. (2004). Pet animals as reservoirs of antimicrobial-resistant bacteria. *J Antimicrob Chemother* **54**, 321–332.

Hossain, A., Reisbig, M. D. & Hanson, N. D. (2004). Plasmid-encoded functions compensate for the biological cost of AmpC overexpression in a clinical isolate of *Salmonella typhimurium*. *J Antimicrob Chemother* **53**, 964–970.

Johnson, J. R., Stell, A. L. & Delavari, P. (2001). Canine feces as a reservoir of extraintestinal pathogenic *Escherichia coli*. *Infect Immun* **69**, 1306–1314.

Johnson, J. R., Kuskowski, M. A., Owens, K., Gajewski, A. & Winokur, P. L. (2003). Phylogenetic origin and virulence genotype in relation to resistance to fluoroquinolones and/or extended-spectrum cephalosporins and cephamycins among *Escherichia coli* isolates from animals and humans. *J Infect Dis* **188**, 759–768.

Kado, C. I. & Liu, S. T. (1981). Rapid procedure for detection and isolation of large and small plasmids. *J Bacteriol* **145**, 1365–1373.

Landgren, M., Oden, H., Kuhn, I., Osterlund, A. & Kahlmeter, G. (2005). Diversity among 2481 *Escherichia coli* from women with community-acquired lower urinary tract infections in 17 countries. *J Antimicrob Chemother* **55**, 928–937.

Leflon-Guibout, V., Jurand, C., Bonacorsi, S., Espinasse, F., Guelfi, M. C., Duportail, F., Heym, B., Bingen, E. & Nicolas-Chanoine, M. H. (2004). Emergence and spread of three clonally related virulent isolates of CTX-M-15-producing *Escherichia coli* with variable resistance to aminoglycosides and tetracycline in a French geriatric hospital. *Antimicrob Agents Chemother* **48**, 3736–3742.

Manges, A. R., Johnson, J. R., Foxman, B., O'Bryan, T. T., Fullerton, K. E. & Riley, L. W. (2001). Widespread distribution of urinary tract infections caused by a multidrug-resistant *Escherichia coli* clonal group. *N Engl J Med* **345**, 1007–1013.

Navarro, F., Perez-Trallero, E., Marimon, J. M., Aliaga, R., Gomariz, M. & Mirelis, B. (2001). CMY-2-producing *Salmonella enterica*, *Klebsiella pneumoniae*, *Klebsiella oxytoca*, *Proteus mirabilis* and *Escherichia coli* strains isolated in Spain (October 1999–December 2000). *J Antimicrob Chemother* **48**, 383–389.

National Committee for Clinical Laboratory Standards (2003). *Performance Standards for Antimicrobial Disk and Dilution Susceptibility Tests for Bacteria Isolated from Animals: Approved Standard – Second Edition M31-A2*. Wayne, PA: National Committee for Clinical Laboratory Standards.

Pérez-Pérez, F. J. & Hanson, N. D. (2002). Detection of plasmid-mediated AmpC β-lactamase genes in clinical isolates by using multiplex PCR. *J Clin Microbiol* **40**, 2153–2162.

Ramchandani, M., Manges, A. R., DebRoy, C., Smith, S. P., Johnson, J. R. & Riley, L. W. (2005). Possible animal origin of human-associated, multidrug-resistant, uropathogenic *Escherichia coli*. *Clin Infect Dis* **40**, 251–257.

Ratnayake, S., Weintraub, A. & Widmalm, G. (1994). Structural studies of the enterotoxigenic *Escherichia coli* (ETEC) O153 O-antigenic polysaccharide. *Carbohydr Res* **265**, 113–120.

Sanchez, S., Stevenson, M. M. A., Hudson, C. R., Maier, M., Buffington, T., Dam, Q. & Maurer, J. J. (2002). Characterization of multidrug-resistant *Escherichia coli* isolates associated with nosocomial infections in dogs. *J Clin Microbiol* **40**, 3586–3595.

Sidjabat, H. E., Townsend, K. M., Hanson, N. D., Bell, J., Stokes, H. W., Gobius, K. S., Moss, S. M. & Trott, D. J. (2006). Identification of bla_{CMY-7} and associated plasmid-mediated resistance genes in multidrug-resistant *Escherichia coli* isolated from dogs at a veterinary teaching hospital in Australia. *J Antimicrob Chemother* **57**, 840–848.

Downloaded from www.sgmjournals.org by
IP: 93.91.26.109
On: Sat, 05 Sep 2015 05:39:27

Tenover, F. C., Arbeit, R. D., Goering, R. V., Mickelsen, P. A., Murray, B. E., Persing, D. H. & Swaminathan, B. (1995). Interpreting chromosomal DNA restriction patterns produced by pulsed-field gel electrophoresis: criteria for bacterial strain typing. *J Clin Microbiol* **33**, 2233–2239.

Trott, D. J., Filippich, L. J., Bensink, J. C., Downs, M. T., McKenzie, S. E., Townsend, K. M., Moss, S. M. & Chin, J. J. (2004). Canine model for investigating the impact of oral enrofloxacin on commensal coliforms and colonization with multidrug-resistant *Escherichia coli*. *J Med Microbiol* **53**, 439–443.

Winokur, P. L., Vonstein, D. L., Hoffman, L. J., Uhlenhopp, E. K. & Doern, G. V. (2001). Evidence for transfer of CMY-2 AmpC β-lactamase plasmids between *Escherichia coli* and *Salmonella* isolates from food animals and humans. *Antimicrob Agents Chemother* **45**, 2716–2722.

Wolk, M., Valinsky, L., Sompolinsky, D., Sechter, I., Schmidt, H., Tetry, S. & Agmon, V. (2004). Endemic occurrence of infections by multidrug-resistant *Escherichia coli* of four unique serotypes in the elderly population of Israel. *FEMS Microbiol Lett* **239**, 249–254.

Yan, J. J., Hong, C. Y., Ko, W. C., Chen, Y. J., Tsai, S. H., Chuang, C. L. & Wu, J. J. (2004). Dissemination of bla_{CMY-2} among *Escherichia coli* isolates from food animals, retail ground meats, and humans in southern Taiwan. *Antimicrob Agents Chemother* **48**, 1353–1356.

Downloaded from www.sgmjournals.org by
IP: 93.91.26.109
On: Sat, 05 Sep 2015 05:39:27